Digital Control for 8 channel analog mux

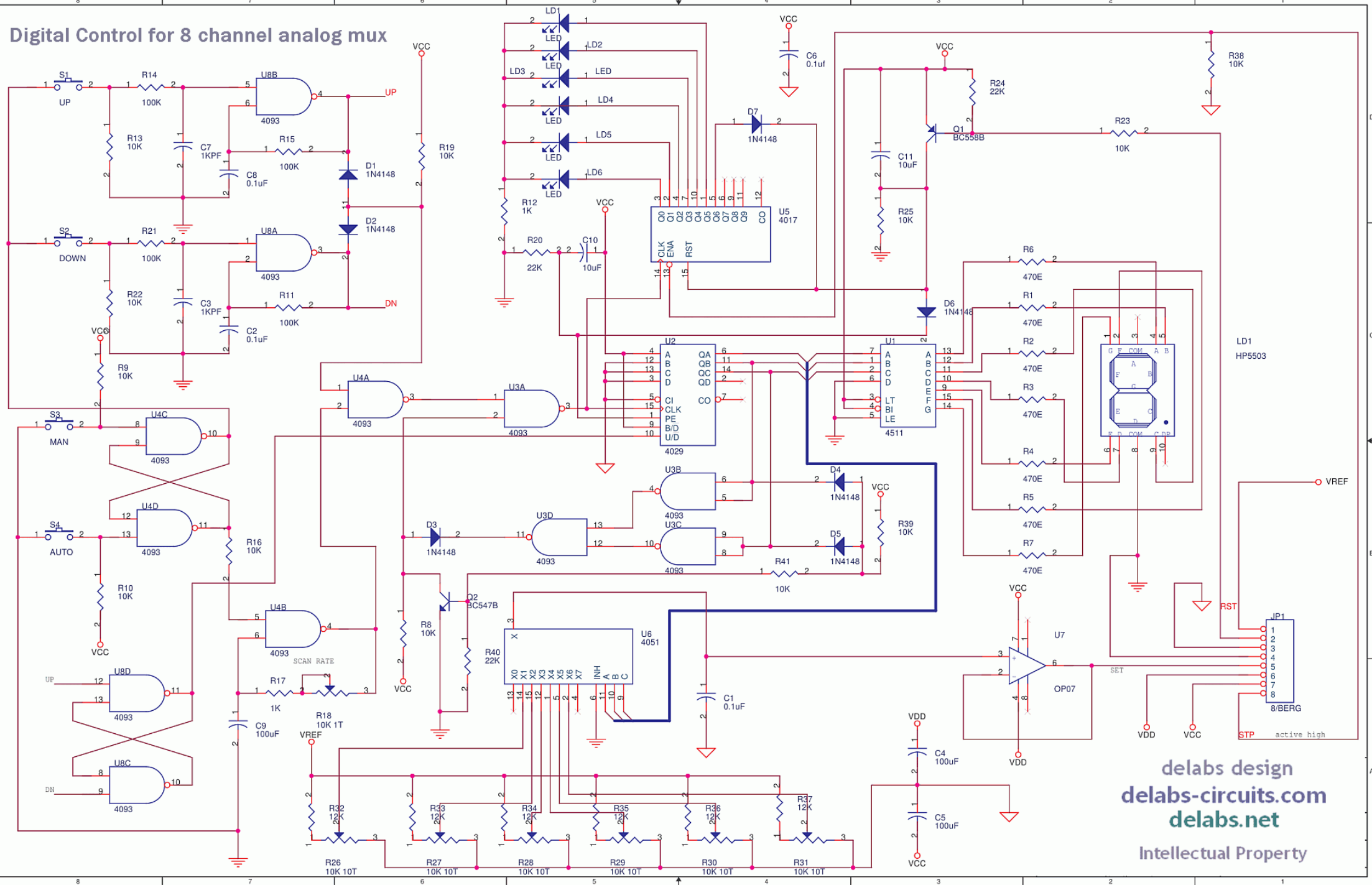

delabs design
delabs-circuits.com
delabs.net

Intellectual Property