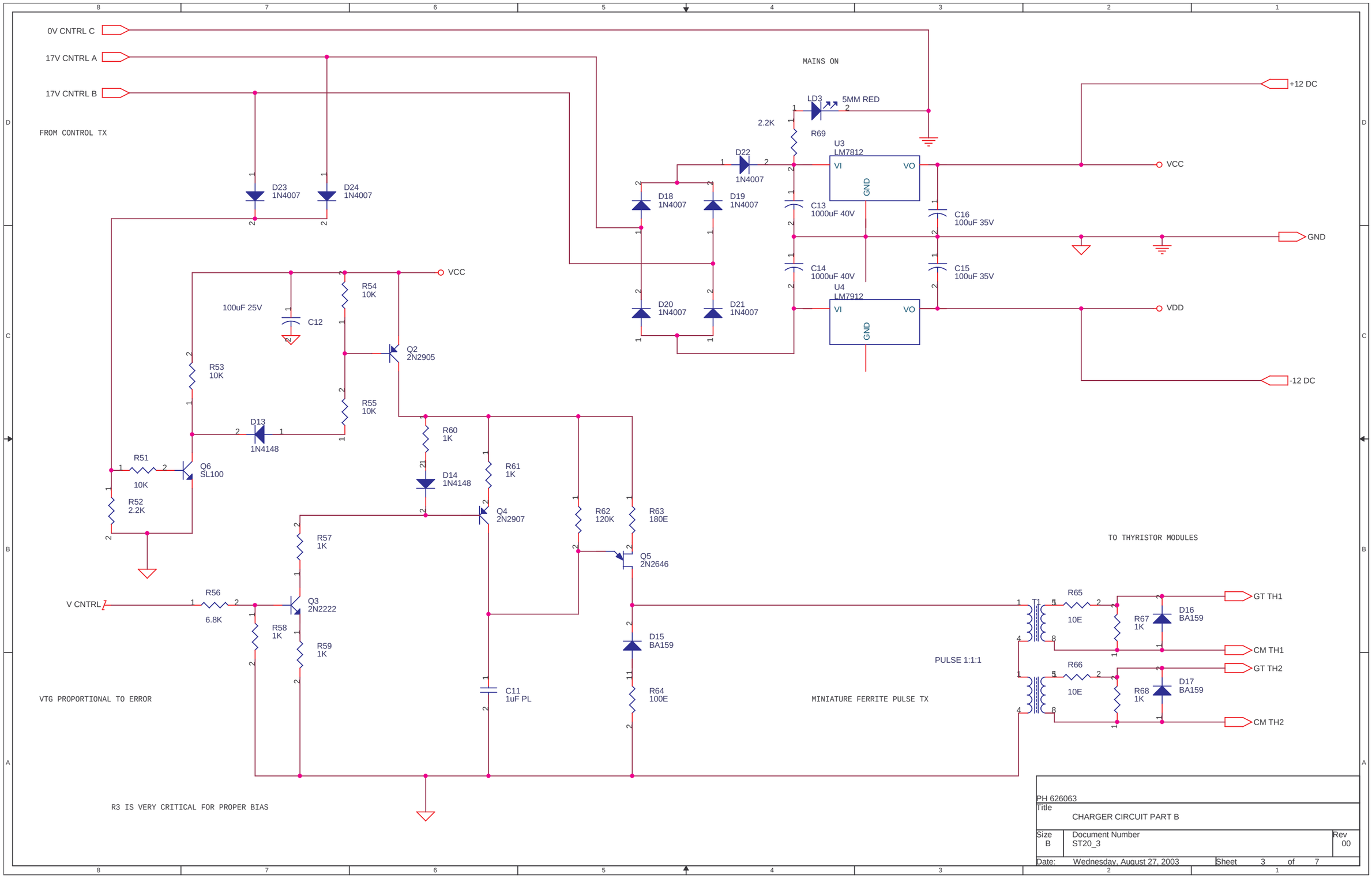

PH 626063

Title: CHARGER CIRCUIT PART B

Size	Document Number	Rev
B	ST20_3	00

Date: Wednesday, August 27, 2003 Sheet 3 of 7