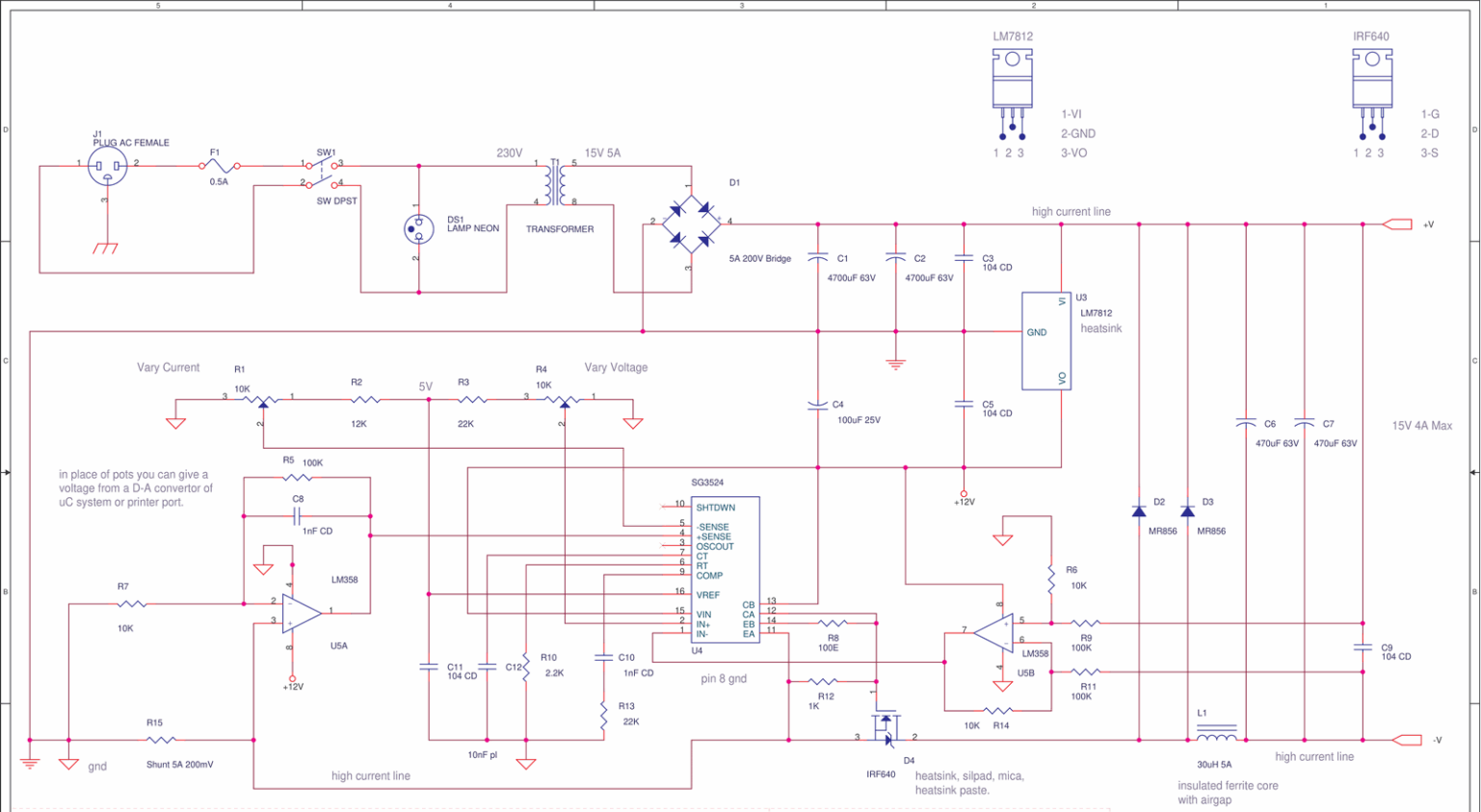

use 74HCT40XX chips in place of CD40XX for only 5V and high speed designs.
put 104 CD cap for all ICs from positive to negative close to IC, even if ommited in circuit, for opamps on dual supply two caps.
unused inputs of logic and opamps pull up or down to avoid oscillations and noise. connect supply of all chips if not mentioned.
"analog ground" and "digital ground" must be linked at power supply only, avoid loops, let grounds radiate from a ground plane.
use MFR 1% for all Resistors, 33E means 33 ohms, 22K means 22 kilo ohms, 1M is 1 megohm. 10T tp means ten turn trimpot.
'474 CD' is 47 with 4 zeros pF, 470000 pF, 470 nF, 0.47uF. "pl" is plastic, low leakage multilayer.

delabs

delabs design
delabs-circuits.com
delabs.net

delabs circuits and technologies			
Title	Switching Power Supply		
Size B	Document Number del20020		Rev 1
Date: Sunday, June 13, 2004	Sheet 1 of 1		