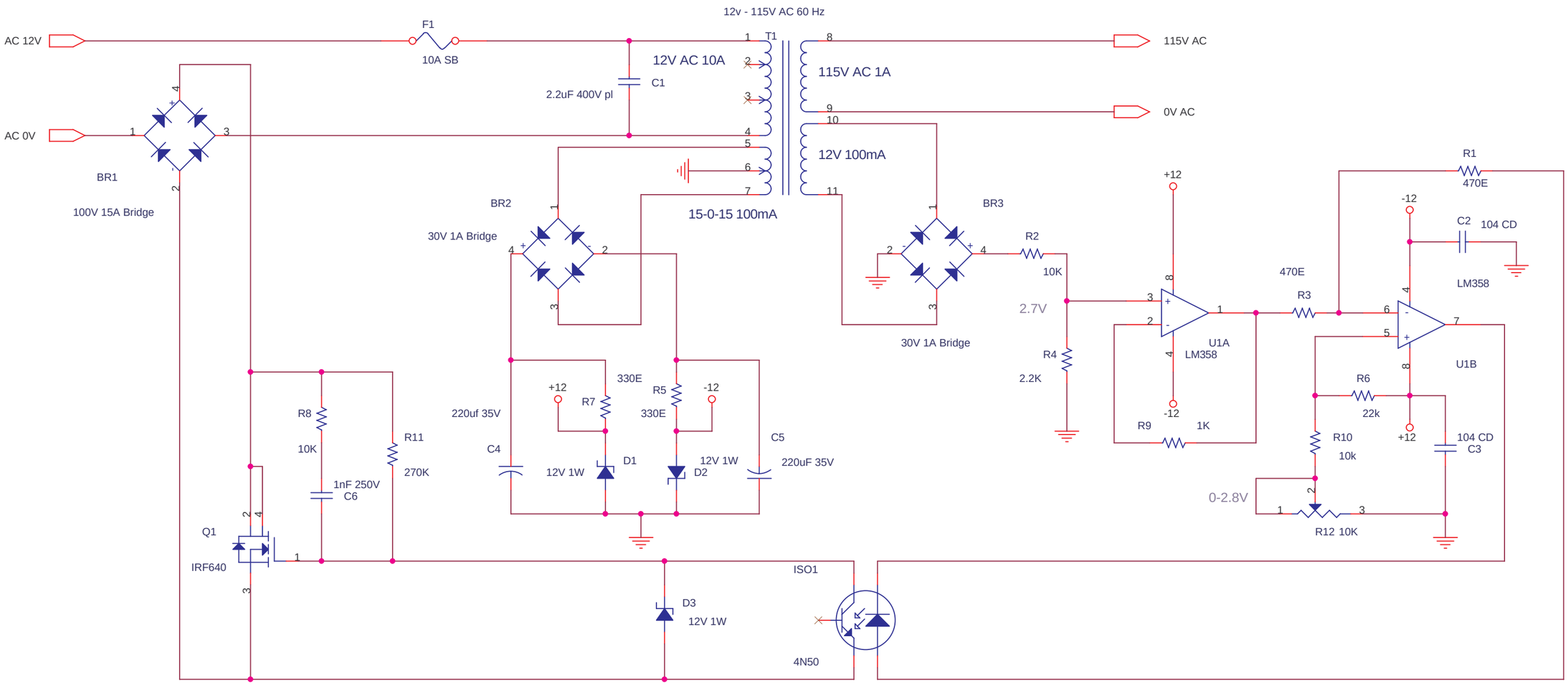


Based On Teledyne Solid State data book application note

Circuit is a design, some of my designs are not yet tested, use only for educational purpose. use as an idea for study only.
put 104 CD cap for all ICs from positive to negative close to IC, even if ommited in circuit, for opamps on dual supply two caps.
use MFR 1% for all Resistors, 33E means 33 ohms, 22K means 22 kilo ohms, 1M is 1 megohm. 10T tp means ten turn trimpot.
'474 CD' is 47 with 4 zeros pF, 470000 pF, 470 nF, 0.47uF, ceramic disc. "pl" is plastic, low leakage multilayer.

delabs

http://www.delabs.net/
http://www.delabs-circuits.com/
http://www.electronics-circuits.com/

| | |
|---|---|
| delabs circuits and technologies | |
| Title | Regulated High Voltage Power Supply |
| Size B | Document Number del20032 |
| Rev 1 | |
| Date: Thursday, February 16, 2006 | Sheet 1 of 1 |