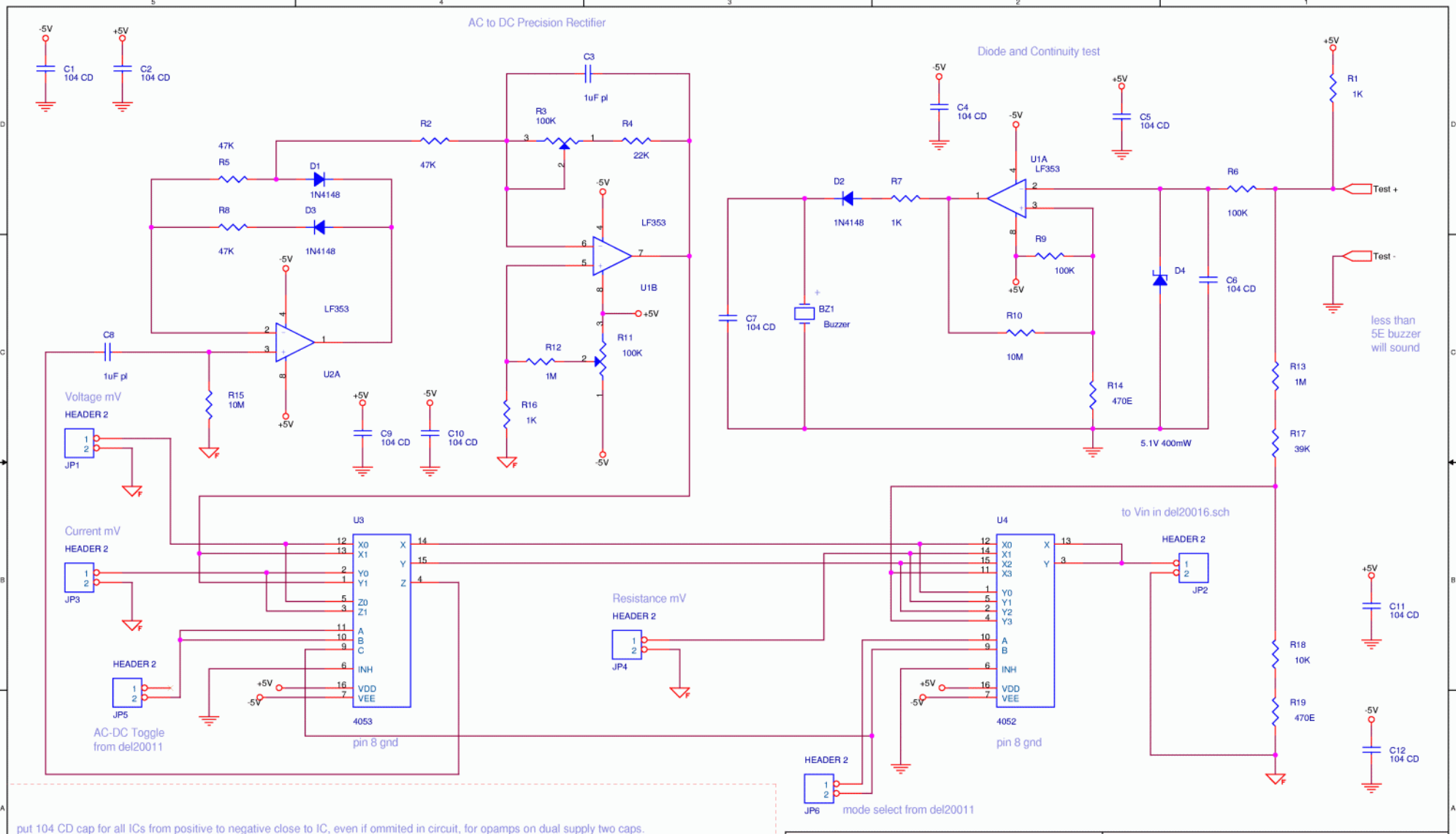

put 104 CD cap for all ICs from positive to negative close to IC, even if ommited in circuit, for opamps on dual supply two caps.
unused inputs of logic and opamps pull up or down to avoid oscillations and noise. connect supply of all chips if not mentioned.
"analog ground" and "digital ground" must be linked at power supply only, avoid loops, let grounds radiate from a ground plane.
use MFR 1% for all Resistors, 33E means 33 ohms, 22K means 22 kilo ohms, 1M is 1 megohm. 10T Trimpot means like 10 turn bourns.
'474 CD' is 47 with 4 zeros pF, 470000 pF, remove 3 zeros 470 nF, shift decimal 3 places 0.47uF. "pl" is plastic, low leakage multilayer.

delabs design
delabs-circuits.com
delabs.net

delabs circuits and technologies	
Title	AC conversion and continuity test
Size B	Document Number del20012
Rev 1	
Date: Monday, May 31, 2004	Sheet 1 of 1